Product Code

2028C/3S04

PWM Expansion Valve
3/8"x1/2"ODS Seat 04
PS = 90 bar - 1305 psi

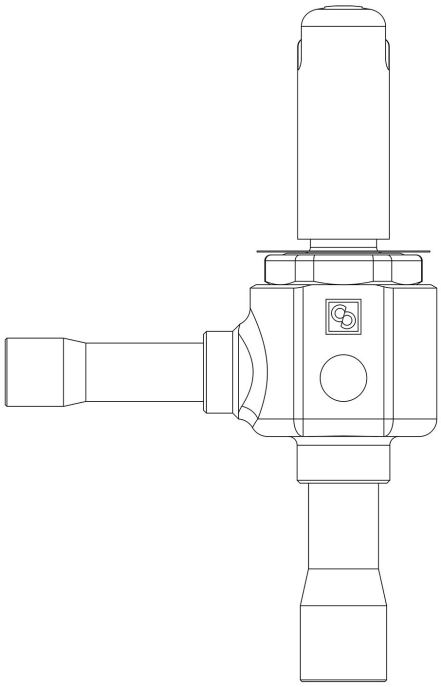

Product use

Accessories for use with refrigerant R744.
These valves are only sold in the model without the coil (S suffix), with 9 nozzles assembled for an increasing output from 2 to 43 kW.

Product Details

Orifice type	04
Connections In Ø [in.]	3/8"
Connections In Ø [mm]	-
Out Ø [in.]	1/2"
Out Ø [mm]	-
Kv [m³/h]	0,043
PS [bar]	90
MWP [psi] (1)	1305
TS [°C] min. (2)	-80
TS [°C] max.	+60
Package pcs.	17

Notes where expressly stated

for rated capacities see table of the orifice assemblies
(1): according to UL approval
(2): UL -50°C

Castel non si assume alcuna responsabilità per eventuali errori nei cataloghi, opuscoli e altro materiale stampato o indicato nel sito Castel.it. Castel si riserva il diritto di modificare i propri prodotti senza preavviso. Tutti i marchi in questo materiale sono di proprietà di Castel. Tutti i diritti riservati.
Castel assumes no responsibility for any errors in catalogs, brochures and other material printed or indicated on the Castel.it website. Castel reserves the right to modify its products without notice. All trademarks in this material are the property of Castel. All rights reserved.