Product Code

4727E/4

Strainer CO2
1/2 "ODS
PS = 130 bar - 1885 psi

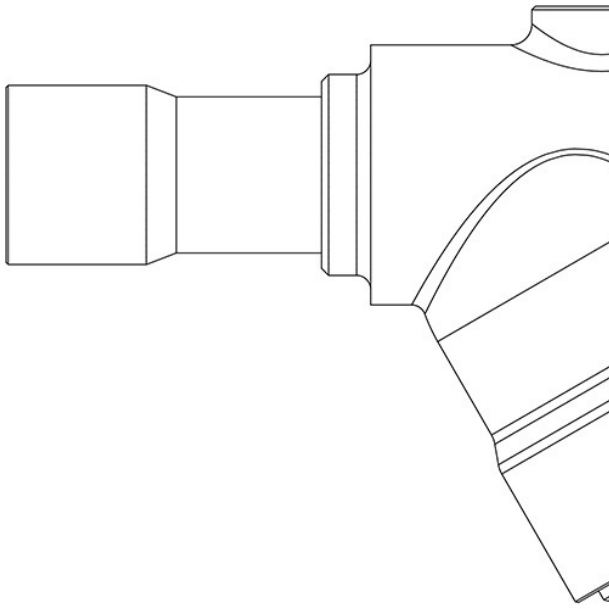

Product use

Inspectionable strainers can be installed in all lines of a refrigeration system, wherever it is necessary to avoid the accumulation of dirt or slag in very delicate components (for example in back-pressure valves). Accessories for use with refrigerant R744.

Product Details

Connections ODS Ø [in.]	1/2"
Filtering surface [cm²]	13
Mesh-opening [mm]	0,1
Kv [m³/h]	2,5
PS [bar]	130
MWP [psi] (1)	1885
TS [°C] min.	-40
TS [°C] max.	+150
Package pcs	15

Notes where expressly stated

(1): according to UL approval

Castel non si assume alcuna responsabilità per eventuali errori nei cataloghi, opuscoli e altro materiale stampato o indicato nel sito Castel.it. Castel si riserva il diritto di modificare i propri prodotti senza preavviso. Tutti i marchi in questo materiale sono di proprietà di Castel. Tutti i diritti riservati.
Castel assumes no responsibility for any errors in catalogs, brochures and other material printed or indicated on the Castel.it website. Castel reserves the right to modify its products without notice. All trademarks in this material are the property of Castel. All rights reserved.