Product Code

9185/RA7

Coil Type CM3-N2 UL
240V 60Hz

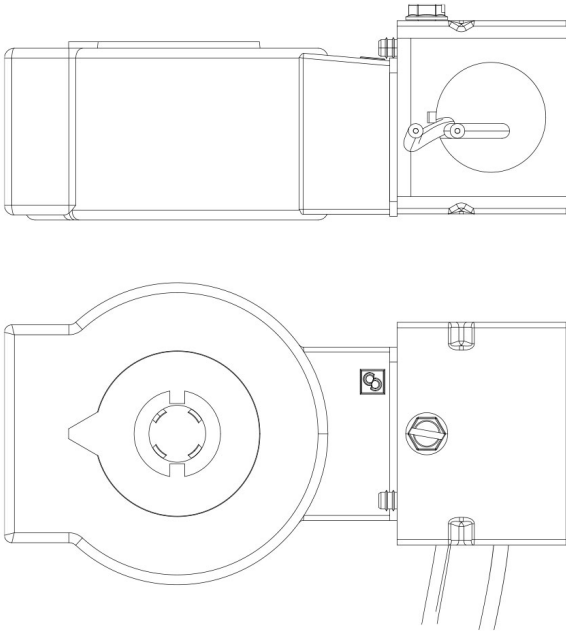

Product use

Coils with the new ?FAST LOCK? fixing system, series 9320, and coils with gear fixing systems, series 9120 and 9121.
Fast-on connections type DIN 43650/A for coils in series 9120 and 9320; co-moulded cables for series 9121 coils.
Available voltages: 220/230 VAC - 50/60 Hz, 12 VDC, 24 VDC, 27 VDC, 48 VDC.
Connectors in series 9150, normalized DIN 43650, to wire, with IP65 protection rating. Connectors in series 9900, again normalized DIN 43650, pre-wired with various cable lengths, with IP65 protection rating.

Product Details

Coil Type (1)	CM3-N2
Voltage [V]	240
Frequency [Hz]	60
Power [W]	20
Connectors Type	Junction box NEMA 2153mm cables
Connectors Protection degree	~ IP 12-32
Package Pcs.	21

Notes where expressly stated

(1): coil with spare part G9150/R97 (yellow nut + black screw + OR)

Castel non si assume alcuna responsabilità per eventuali errori nei cataloghi, opuscoli e altro materiale stampato o indicato nel sito Castel.it. Castel si riserva il diritto di modificare i propri prodotti senza preavviso. Tutti i marchi in questo materiale sono di proprietà di Castel. Tutti i diritti riservati.
Castel assumes no responsibility for any errors in catalogs, brochures and other material printed or indicated on the Castel.it website. Castel reserves the right to modify its products without notice. All trademarks in this material are the property of Castel. All rights reserved.